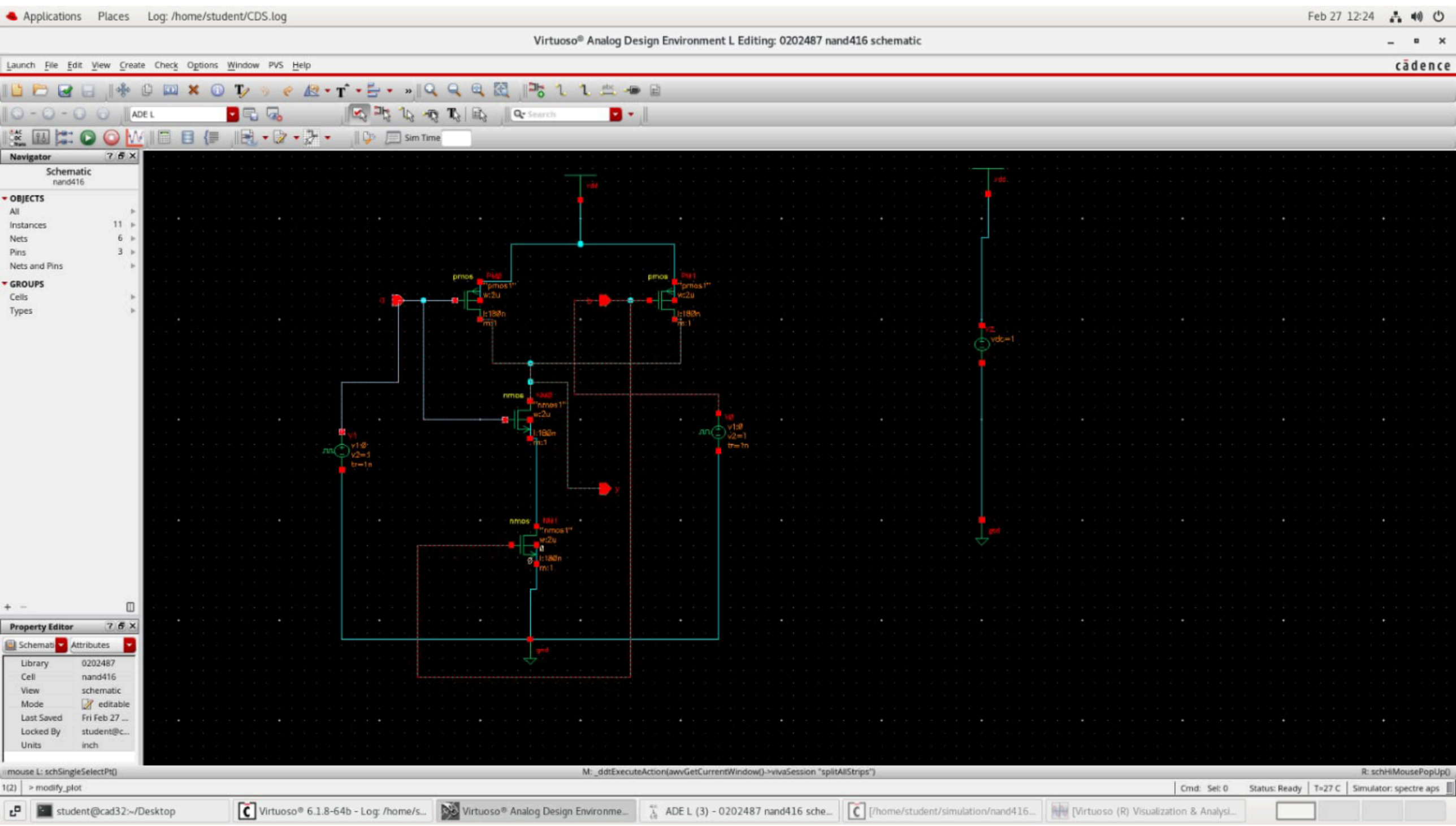
Applications Places Log: /home/student/CDS.log
Feb 27 12:24
Virtuoso® Analog Design Environment L Editing: 0202487 nand416 schematic
Launch File Edit View Create Check Options Window PVS Help
cadence
ADE L
Sim Time
Navigator
Schematic
nand416
OBJECTS
All
Instances 11
Nets 6
Pins 3
Nets and Pins
GROUPS
Cells
Types
Property Editor
Schemati
Attributes
Library 0202487
Cell nand416
View schematic
Mode editable
Last Saved Fri Feb 27 ...
Locked By student@c...
Units inch
pmos
nmos
vdd
gnd
y
mouse L: schSingleSelectPt()
M: _ddtExecuteAction(awvGetCurrentWindow()->vivaSession "splitAllStrips")
R: schHiMousePopUp()
1(2) > modify_plot
Cmd: Sel: 0
Status: Ready
T=27 C
Simulator: spectre aps
student@cad32:~/Desktop
Virtuoso® 6.1.8-64b - Log: /home/s...
Virtuoso® Analog Design Environme...
ADE L (3) - 0202487 nand416 sche...
[/home/student/simulation/nand416...
[Virtuoso (R) Visualization & Analysi...

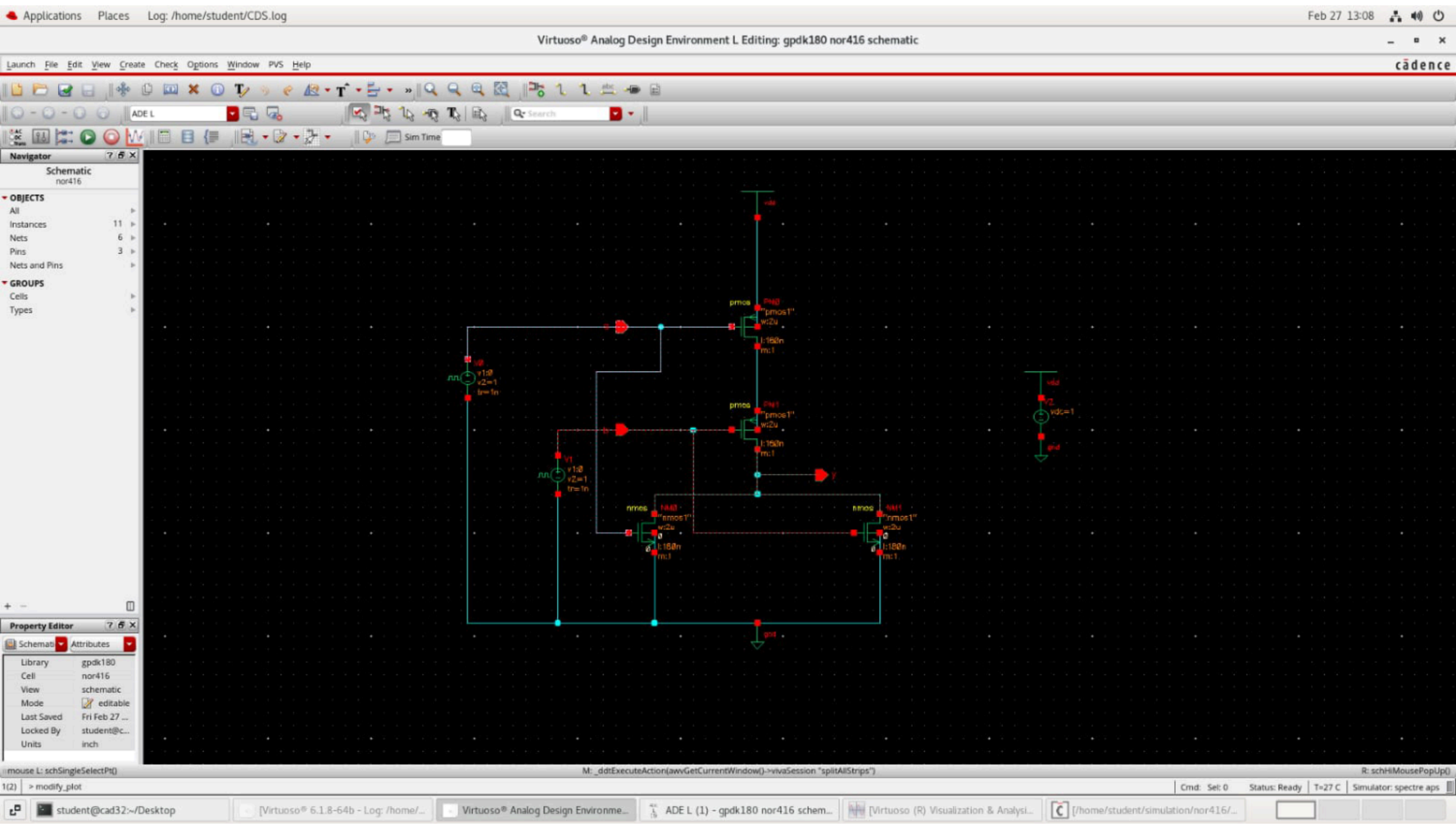
Applications Places Log: /home/student/CDS.log
Feb 27 13:08
Virtuoso® Analog Design Environment L Editing: gpdk180 nor416 schematic
Launch File Edit View Create Check Options Window PVS Help
cadence
Navigator
Schematic
nor416
OBJECTS
All
Instances 11
Nets 6
Pins 3
Nets and Pins
GROUPS
Cells
Types
Property Editor
Schemati
Attributes
Library gpdk180
Cell nor416
View schematic
Mode editable
Last Saved Fri Feb 27 ...
Locked By student@c...
Units inch
pmos
nmos
y
mouse L: schSingleSelectPt()
M: _ddtExecuteAction(awvGetCurrentWindow()->vivaSession "splitAllStrips")
R: schHiMousePopUp()
> modify_plot
Cmd: Sel: 0
Status: Ready
T=27 C
Simulator: spectre aps
student@cad32:~/Desktop
Virtuoso® Analog Design Environme...
ADE L (1) - gpdk180 nor416 schem...

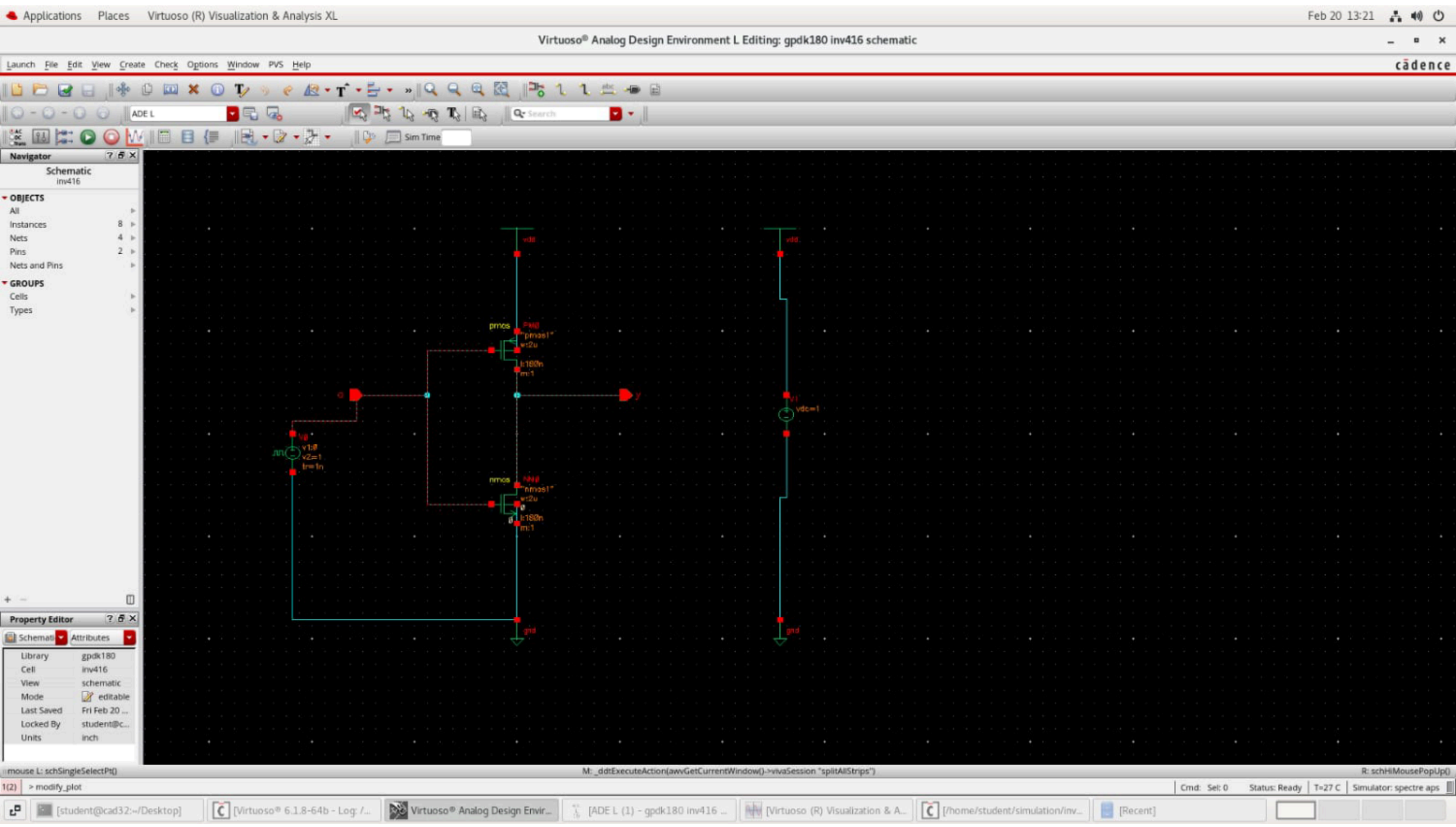
Applications Places Virtuoso (R) Visualization & Analysis XL
Feb 20 13:21
Virtuoso® Analog Design Environment L Editing: gpdk180 inv416 schematic
Launch File Edit View Create Check Options Window PVS Help
cadence
ADE L
Sim Time
Navigator
Schematic
inv416
OBJECTS
All
Instances 8
Nets 4
Pins 2
Nets and Pins
GROUPS
Cells
Types
Property Editor
Schemati
Attributes
Library gpdk180
Cell inv416
View schematic
Mode editable
Last Saved Fri Feb 20 ...
Locked By student@c...
Units inch
pmos
nmos
vdd
gnd
vdc=1
v1=0
v2=1
tr=1n
mouse L: schSingleSelectPt()
M: _ddtExecuteAction(awvGetCurrentWindow()->vivaSession "splitAllStrips")
R: schHiMousePopUp()
> modify_plot
Cmd: Sel: 0
Status: Ready
T=27 C
Simulator: spectre aps
[student@cad32:~/Desktop]
[Virtuoso® 6.1.8-64b - Log: /...
Virtuoso® Analog Design Envir...
[ADE L (1) - gpdk180 inv416 ...
[Virtuoso (R) Visualization & A...
[/home/student/simulation/inv...
[Recent]

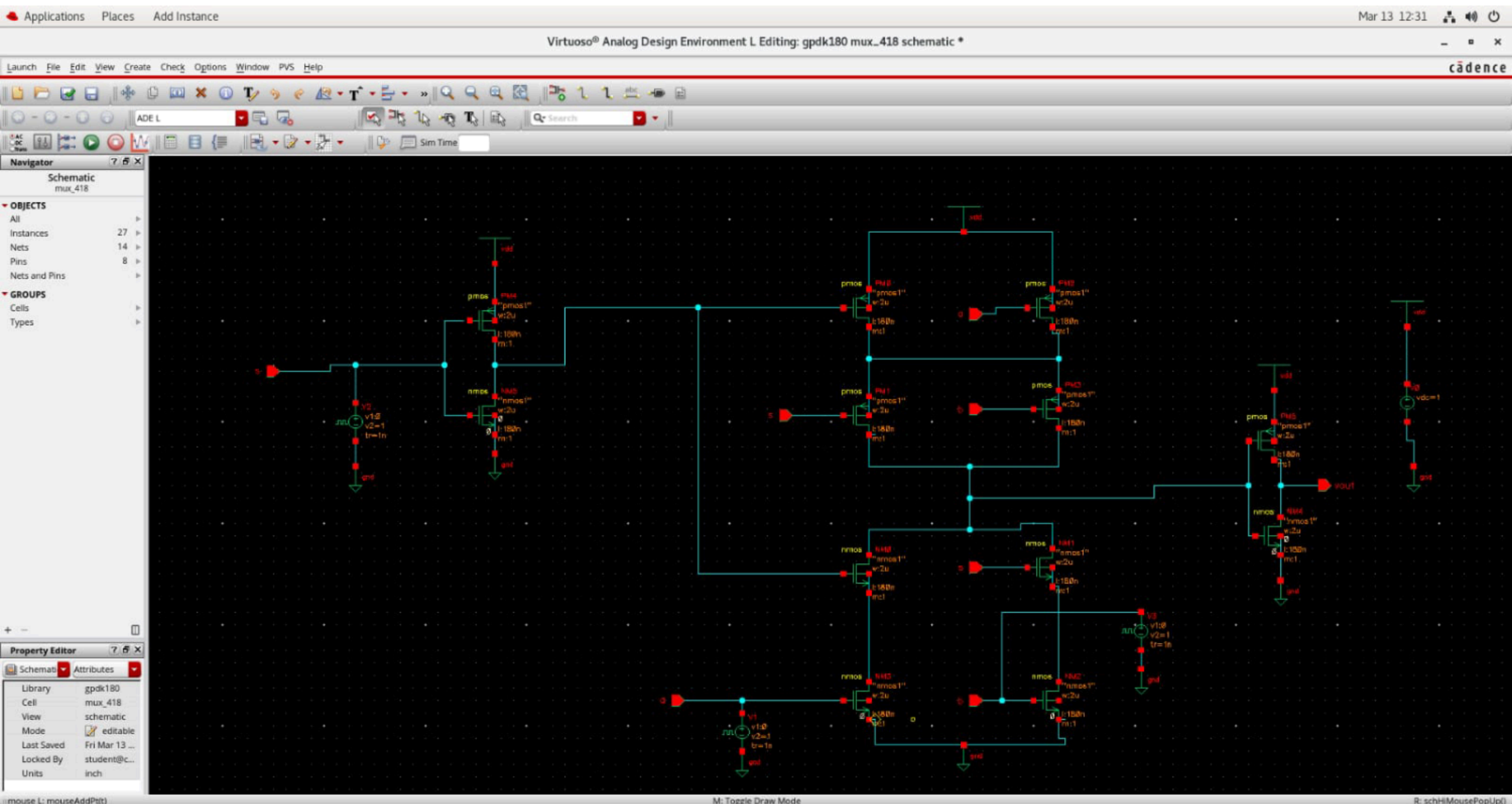
Applications Places Add Instance
Mar 13 12:31
Virtuoso® Analog Design Environment L Editing: gpdk180 mux_418 schematic *
Launch File Edit View Create Check Options Window PVS Help
cadence
ADE L
Sim Time
Navigator
Schematic
mux_418
OBJECTS
All
Instances 27
Nets 14
Pins 8
Nets and Pins
GROUPS
Cells
Types
Property Editor
Schemati
Attributes
Library gpdk180
Cell mux_418
View schematic
Mode editable
Last Saved Fri Mar 13 ...
Locked By student@c...
Units inch
mouse L: mouseAddPt(t)
M: Toggle Draw Mode
R: schHiMousePopUp()
Point at starting point for the router or snap to diamond using the "s" key.
Cmd: Wire Sel: 0
Status: Ready
T=27 C
Simulator: spectre aps
student@cad32:~/Desktop
[Virtuoso® 6.1.8-64b - Log: /home/...
Virtuoso® Analog Design Environme...
ADE L (1) - gpdk180 mux_418 sche...
[/home/student/simulation/mux_41...
[Virtuoso (R) Visualization & Analysi...

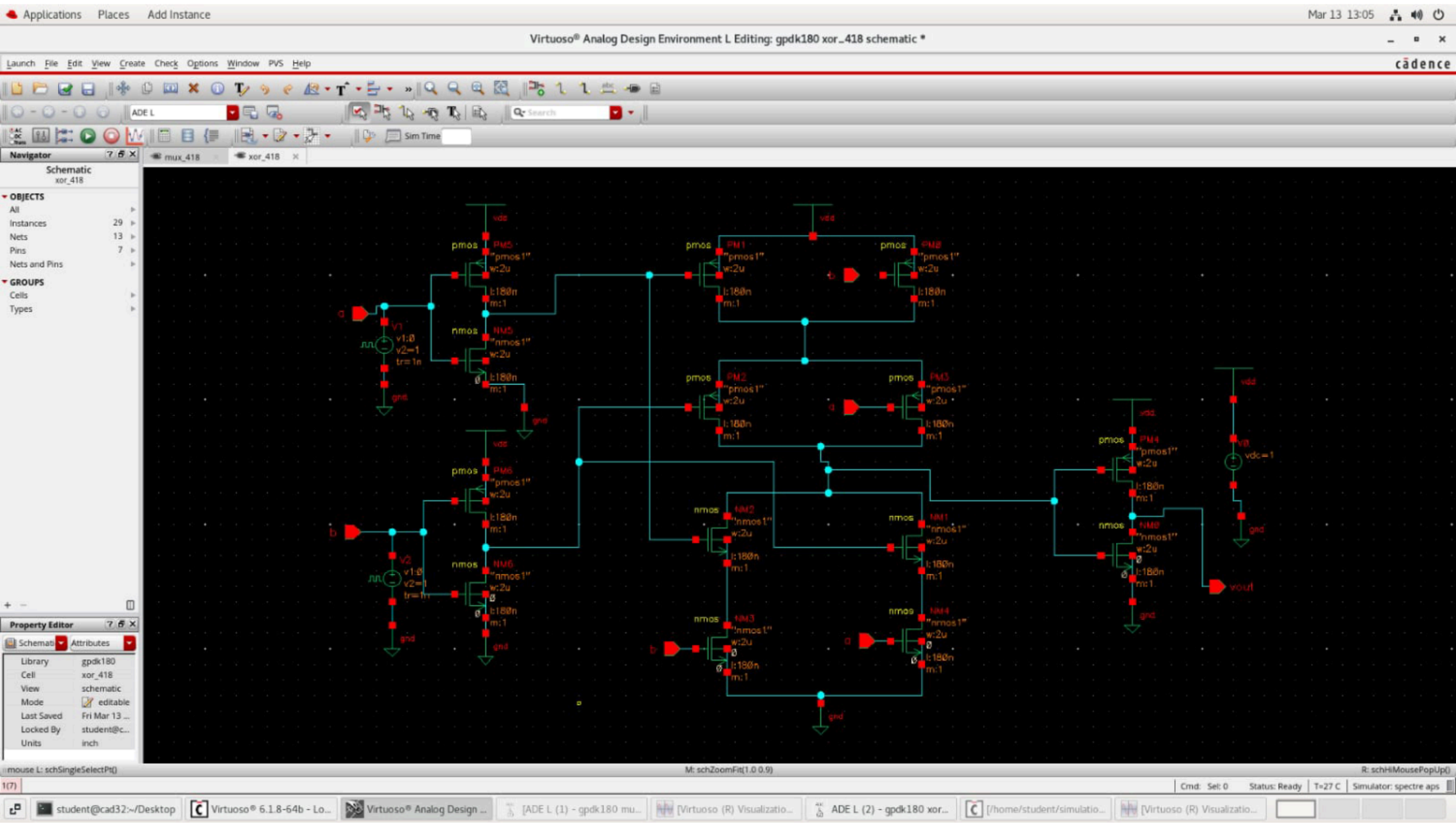
Applications Places Add Instance
Mar 13 13:05
Virtuoso® Analog Design Environment L Editing: gpdk180 xor_418 schematic *
Launch File Edit View Create Check Options Window PVS Help
cadence
Navigator
Schematic
xor_418
OBJECTS
All
Instances 29
Nets 13
Pins 7
Nets and Pins
GROUPS
Cells
Types
mux_418
xor_418
Property Editor
Library gpdk180
Cell xor_418
View schematic
Mode editable
Last Saved Fri Mar 13 ...
Locked By student@c...
Units inch
vdd
gnd
vout
mouse L: schSingleSelectPt()
M: schZoomFit(1.0 0.9)
R: schHiMousePopUp()
Cmd: Sel: 0
Status: Ready
T=27 C
Simulator: spectre aps
student@cad32:~/Desktop
Virtuoso® 6.1.8-64b - Lo...
Virtuoso® Analog Design ...
[ADE L (1) - gpdk180 mu...
[Virtuoso (R) Visualizatio...
ADE L (2) - gpdk180 xor...
[/home/student/simulatio...
[Virtuoso (R) Visualizatio...

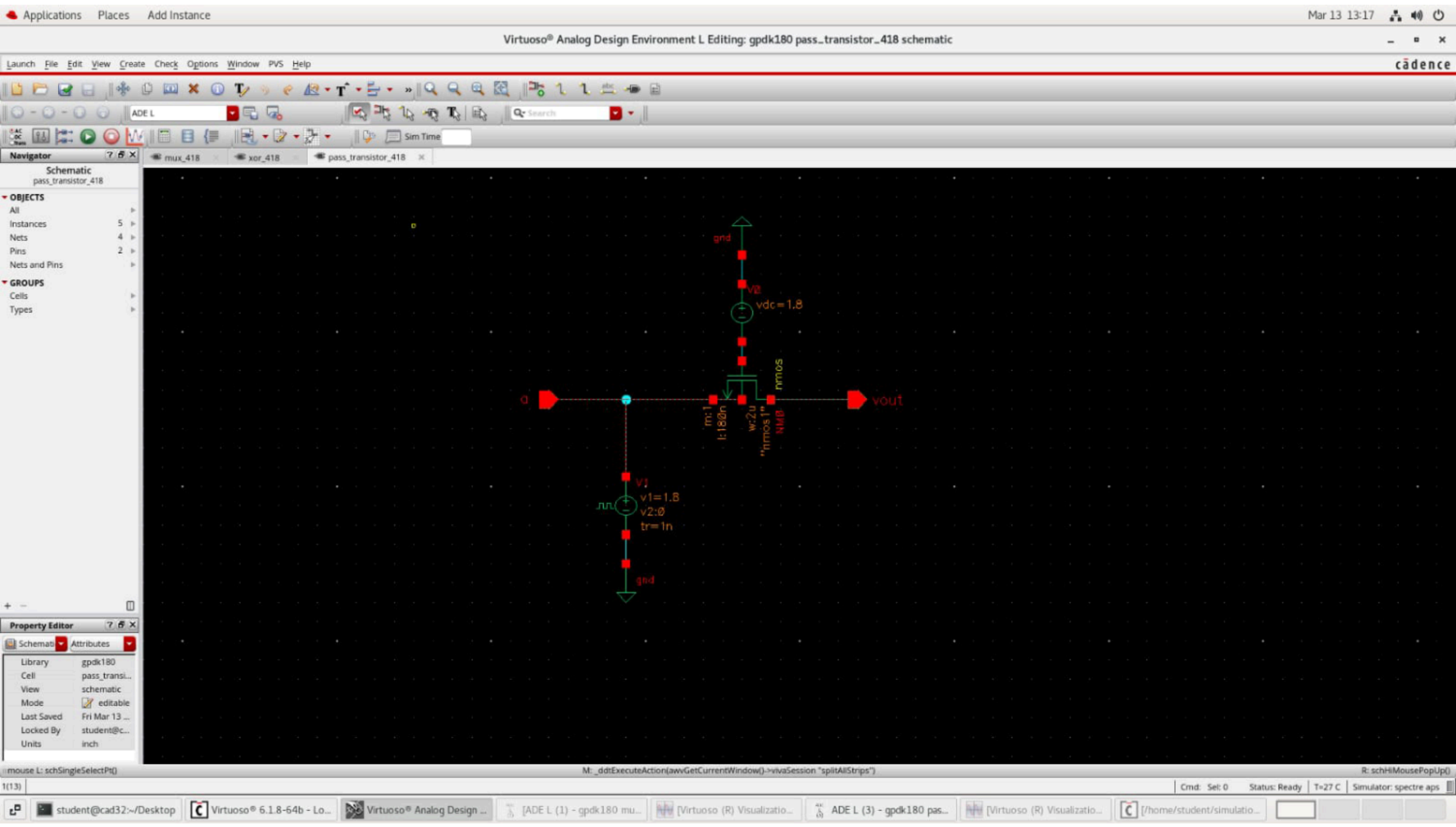
Applications Places Add Instance
Mar 13 13:17
Virtuoso® Analog Design Environment L Editing: gpdk180 pass_transistor_418 schematic
Launch File Edit View Create Check Options Window PVS Help
cadence
ADE L
Sim Time
Navigator
Schematic
pass_transistor_418
OBJECTS
All
Instances 5
Nets 4
Pins 2
Nets and Pins
GROUPS
Cells
Types
mux_418
xor_418
pass_transistor_418
gnd
V0
vdc=1.8
nmos
a
vout
m:1
l:180n
w:2u
"nmos1"
NM0
V1
v1=1.8
v2:0
tr=1n
gnd
Property Editor
Schemati
Attributes
Library gpdk180
Cell pass_transi...
View schematic
Mode editable
Last Saved Fri Mar 13 ...
Locked By student@c...
Units inch
mouse L: schSingleSelectPt()
M: _ddtExecuteAction(awvGetCurrentWindow()->vivaSession "splitAllStrips")
R: schHiMousePopUp()
Cmd: Sel: 0
Status: Ready
T=27 C
Simulator: spectre aps
student@cad32:~/Desktop
Virtuoso® 6.1.8-64b - Lo...
Virtuoso® Analog Design ...
[ADE L (1) - gpdk180 mu...
[Virtuoso (R) Visualizatio...
ADE L (3) - gpdk180 pas...
[Virtuoso (R) Visualizatio...
[/home/student/simulatio...